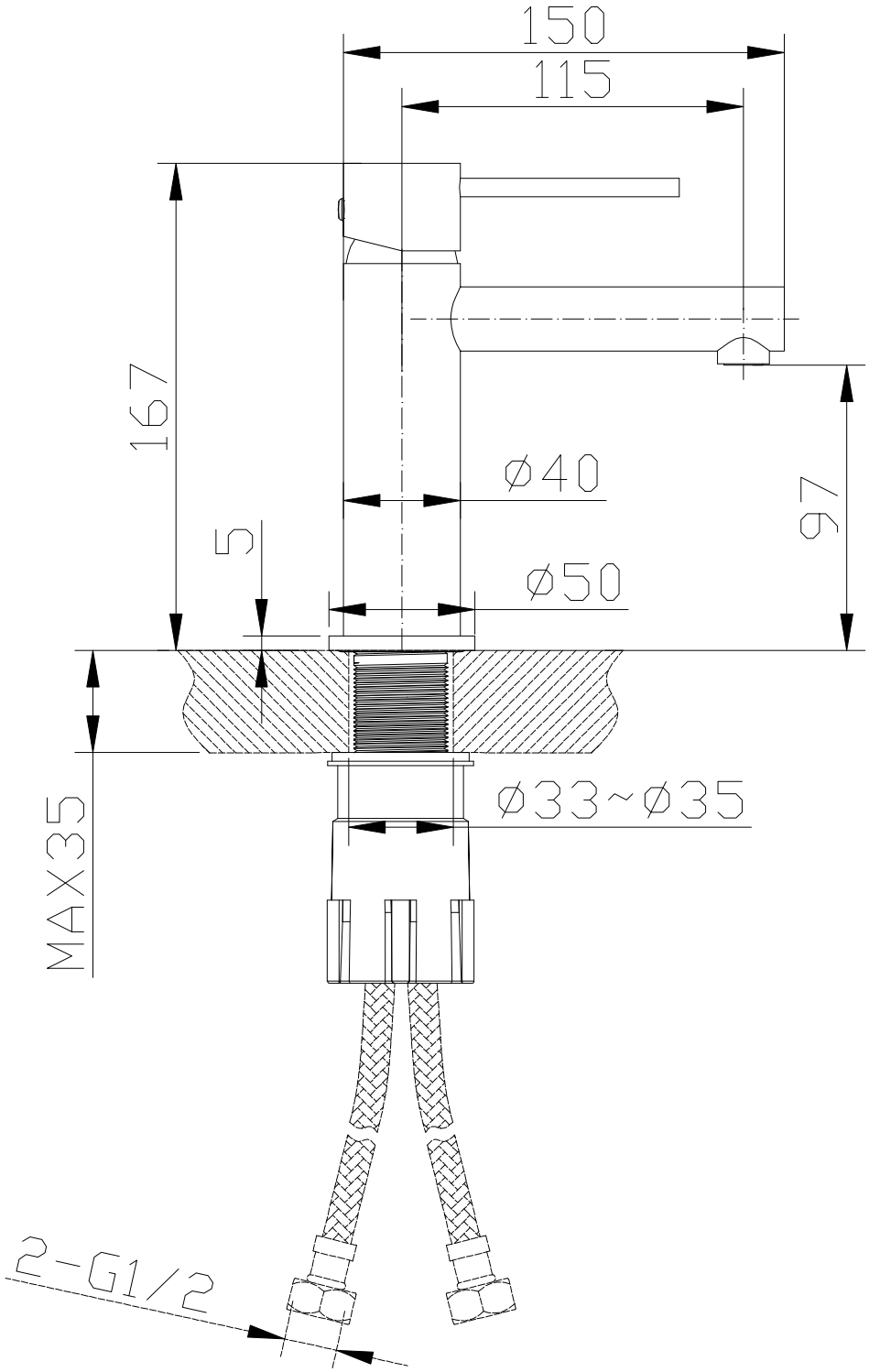
150
115
167
97
Ø40
Ø50
5
MAX35
Ø33~Ø35
2-G1/2

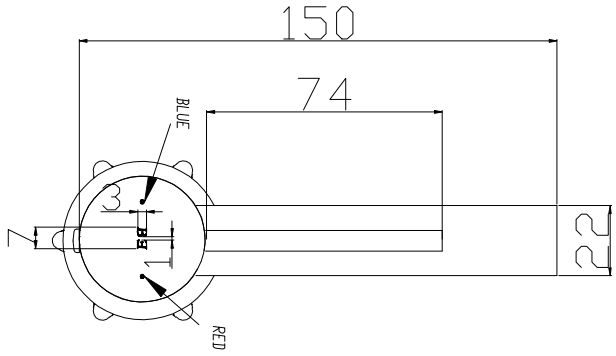
150
74
BLUE
3
7
1
22
RED